PIPES AT STRIP FOOTINGS — TC-FDN-51

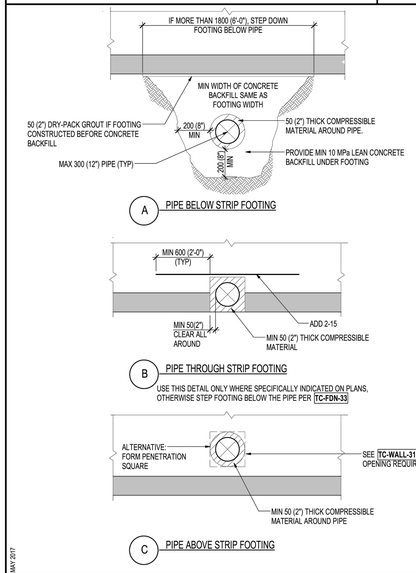

MAY 2017

FOOTING AT STEEL COLUMN — TC-FDN-02

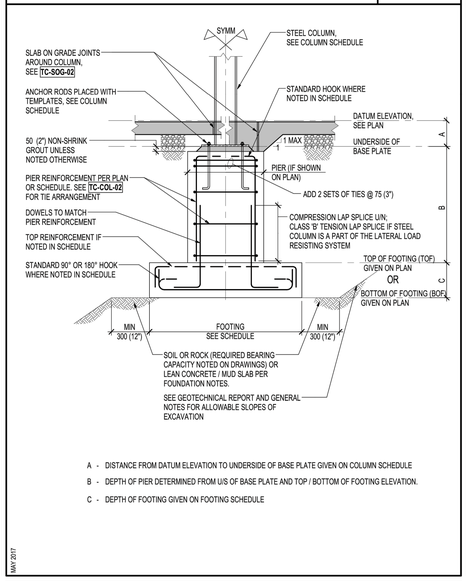

A - DISTANCE FROM DATUM ELEVATION TO UNDERSIDE OF BASE PLATE GIVEN ON COLUMN SCHEDULE

B - DEPTH OF PIER DETERMINED FROM U/S OF BASE PLATE AND TOP / BOTTOM OF FOOTING ELEVATION.

C - DEPTH OF FOOTING GIVEN ON FOOTING SCHEDULE

MAY 2017

DRAWING ABBREVIATIONS — TG-ABBR-01

ABUT	ABUTMENT	DW	DRAWING	ℓd	TENSION DEVELOPMENT LENGTH OF REBAR	SPEC	SPECIFICATIONS
ADD'L	ADDITIONAL	DWL	DOWEL	ℓdc	COMPRESSION DEVELOPMENT LENGTH OF REBAR	SPF	SPRUCE PINE FIR
AEC	ARCHITECTURALLY EXPOSED CONCRETE	EA	EACH	ℓdh	TENSION EMBEDMENT LENGTH WITH STANDARD HOOK	SR	STUD RAIL
AESS	ARCHITECTURALLY EXPOSED STRUCTURAL STEEL	ECR	EPOXY COATED REINFORCEMENT	LE	LEFT END	SS	STAINLESS STEEL
AIFB	ASPHALT IMPREGNATED FIBERBOARD	EBF	ECCENTRICALLY BRACED FRAME	LG	LONG	ST	STRAIGHT
ALT	ALTERNATE	EE	EACH END	LL	LOWER LEVEL	STD	STANDARD
ARCH	ARCHITECTURAL	EF	EACH FACE	LLH	LONG LEG HORIZONTAL	STE	SHEAR TRANSFER ELEMENTS
A-ROD	ANCHOR ROD	EJ, EXP JT	EXPANSION JOINT	LLV	LONG LEG VERTICAL	STG	STAGGERED
ASPH	ASPHALT	ELECT	ELECTRICAL	LONG	LONGITUDINAL	STIR	STIRRUP
AVG	AVERAGE	EL	ELEVATION	LSH	LONG SIDE HORIZONTAL	STIFF	STIFFENER
B, BOT	BOTTOM	ELEV	ELEVATOR	LP	LOW POINT	STL	STEEL
BOF	BOTTOM OF FOOTING	EMBED	EMBEDMENT	LWT	LIGHT WEIGHT	STR	SEISMIC STRAP
BOP	BOTTOM OF PILE	ENG	ENGINEER	MAX	MAXIMUM	STRUCT	STRUCTURAL
BCE	BOTTOM CHORD EXTENSION	EOD	EDGE OF DECK	MC	MOMENT CONNECTION (—◤ ├—)	SWT	SELF WEIGHT
BCP	BORED CONCRETE PILE	EOS	EDGE OF SLAB	MECH	MECHANICAL	SYMM	SYMMETRICAL
BEW	BOTTOM EACH WAY	ES	EACH SIDE	MEZZ	MEZZANINE	t	THICKNESS
BLL	BOTTOM LOWER LAYER	EQ	EQUAL	MF	MOMENT FRAME	TB	TRANSFER BEAM
BP	BASE PLATE	EW	EACH WAY	MIN	MINIMUM	TBB	TOP BASIC BARS
BRG	BEARING	EX, EXIST	EXISTING	MISC	MISCELLANEOUS	T	TOP
BRP	BEARING PLATE	EXT	EXTERIOR	MJ	MOVEMENT JOINT	TDL	TENSION DEVELOPMENT LENGTH
BSMT	BASEMENT	FC	FUTURE COLUMN	ML	MIDDLE LAYER	TEW	TOP EACH WAY
BUL	BOTTOM UPPER LAYER	FD	FLOOR DRAIN	NF	NEAR FACE	T&G	TONGUE AND GROOVE
BUP	BOTTOM OF UNDERPINNING	FF	FAR FACE	NIC	NOT IN CONTRACT	TJ	TIE JOIST
C	CAMBER	FIN	FINISHED	NOM	NOMINAL	TLL	TOP LOWER LAYER
CA	COLUMN ABOVE ONLY (NO COLUMN BELOW)	FL	FLOOR	NTS	NOT TO SCALE	T/O	TOP OF
CANT	CANTILEVER	FMC	FULL MOMENT CONNECTION (FOR FULL MOMENT CAPACITY)	O/C	ON CENTER	TOB	TOP OF (GRADE) BEAM
CAT	CATEGORY (FOR AESS)	FND	FOUNDATION	OD	OUTSIDE DIAMETER	TOC	TOP OF CONCRETE
CB	COLUMN BELOW ONLY (NO COLUMN ABOVE)	FTG	FOOTING	OF	OUTSIDE FACE	TOF	TOP OF FOOTING
CDL	COMPRESSION DEVELOPMENT LENGTH	GA	GAUGE	OPP	OPPOSITE	TOS	TOP OF STEEL
CEL	CUT OFF ELEVATION FOR PILES	GALV	GALVANIZED	OWSJ	OPEN WEB STEEL JOIST	TOP	TOP OF PILE
CIP	CAST-IN PLACE	GB	GRADE BEAM	PAF	POWDER ACTUATED FASTENERS	TOW	TOP OF WALL
CJ	CONTROL JOINT	GEN	GENERAL	PL	PLATE	TPC	TOP OF PILE CAP
CLR	CLEAR	GL	GROUNE	PROJ	PROJECT, PROJECTION	TRANS	TRANSVERSE
CL	CENTRELINE	GRD	GROUND	PS	PIPE SUPPORT	TSA	TENSION SPLICE "A"
CMU	CONCRETE MASONRY UNITS	h	TOTAL THICKNESS, SLAB THICKNESS AWAY FROM DROP PANEL	PT	POST TENSIONED	TSB	TENSION SPLICE "B"
CNT	STEEL DECK CORE NOMINAL THICKNESS	hd	SLAB OVERALL THICKNESS AT DROP PANEL	PTL	PRESSURE TREATED LUMBER	TUL	TOP UPPER LAYER
COMP	COMPOSITE	H, HORIZ	HORIZONTAL	R	RADIUS	TYP	TYPICAL
COL	COLUMN	(H)	HIGH BEAM	RA	ROOF ANCHOR	U-BAR	"U" SHAPED BAR
CONC	CONCRETE	HC	HOLLOWCORE	RD	ROOF DRAIN	UDB	UNIFORMLY DISTRIBUTED BARS
CONT	CONTINUOUS	HD	HOLD DOWN	RE	RIGHT END	U/F	UNDERSIDE OF FOOTING
CONT'D	CONTINUED	HDG	HOT DIPPED GALVANIZED	REINF	REINFORCEMENT	UL	UPPER LEVEL
CONST.J.	CONSTRUCTION JOINT	HEF	HORIZONTAL EACH FACE	REM	REMAINDER	ULS	ULTIMATE LIMIT STATE
CP	CONNECTION PLATE	HIF	HORIZONTAL INSIDE FACE	REQ'D	REQUIRED	U/S	UNDERSIDE
CPL	CAP PLATE	HH	HOOK EACH END	REV	REVISION	U/N, UNO	UNLESS NOTED OTHERWISE
CS	COMPRESSION LAP SPLICE	HIC	HORIZONTAL IN CENTRE	RF	RIGID FRAME	UPT	UPTURNED
COV	CLEAR COVER	HOF	HORIZONTAL OUTSIDE FACE	RL	REFERENCE LINE	V, VERT	VERTICAL, VERTICALS
C/W	COMPLETE WITH, CONNECT WITH	HP	HIGH POINT	RSS	RETAINED SOIL SYSTEM	VB	VERTICAL BRACING
CWS	(SEE TO GENERAL NOTES)	HSC	HORIZONTAL SLOTTED CONNECTION	RTU	ROOF TOP UNIT	VEF	VERTICAL EACH FACE
CLS	(SEE TO GENERAL NOTES)	IBI	INTEGRITY BARS INTERIOR	RET. WALL	RETAINING WALL	VIF	VERTICAL INSIDE FACE
DCA	DRILLED CONCRETE ANCHOR, SEE GENERAL NOTES	IBE	INTEGRITY BARS EXTERIOR	R/W	REINFORCE WITH	VIC	VERTICAL IN CENTRE
DEMO	DEMOLITION	IBA	INTEGRITY BARS ADDED	r.w.	REQUIRED WITH	VOF	VERTICAL OUTSIDE FACE
DET	DETAIL	IBB	INTEGRITY BOTTOM BARS (THROUGHOUT)	S2F	STEP DOWN FOOTING (IN DIRECTION OF ARROW)	VSC	VERTICALLY SLOTTED CONNECTION
D.FIR-L	DOUGLAS FIR-LARCH	ID	INSIDE DIAMETER	SEC	SECTION	WB	WALL BELOW
DIA, Ø	DIAMETER	INT	INTERIOR	SIM	SIMILAR	WC	WIND COLUMN
DIV	DIVIDER BEAM	IF	INSIDE FACE	SJ	STEEL JOIST	w/o	WITHOUT
DMA	DRILLED MASONRY ANCHOR, SEE GENERAL NOTES	JG	JOIST GIRDER	SL	SLAB, SHELF ANGLE	WP	WORK POINT
DN	DOWN	KB	KNEE BRACING	SLBB	SHORT LEG BACK TO BACK	WSP-S	WSP STRUCTURAL
DNW	DOUBLE NUT AND WASHER	(L)	LOW BEAM	SLS	SERVICEABILITY LIMIT STATE	WWF	WELDED WIRE FABRIC
DP	DEEP	2-L	BACK TO BACK ANGLES	SOG	SLAB-ON-GRADE	ZRP	ZINC RICH PAINT

JUNE 2017

SLOPE BETWEEN ADJACENT EXCAVATIONS — TC-FDN-41

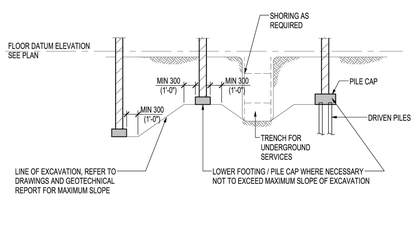

MAY 2017

BOLLARD FOUNDATION — TC-FDN-61

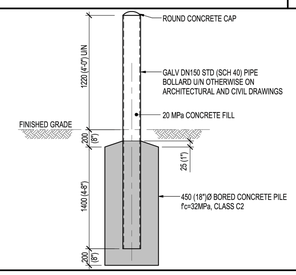

MAY 2017

SLAB ON GRADE JOINTS AROUND STEEL COLUMN — TC-SOG-02

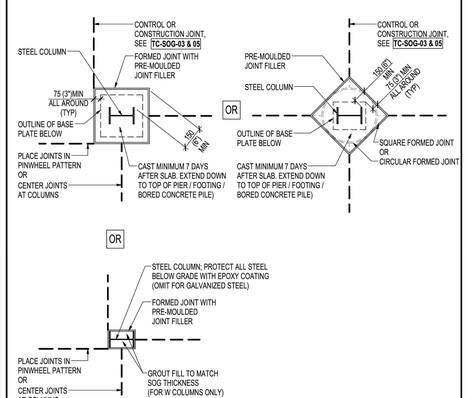

NOTE:
SUBMIT PROPOSED JOINT LAYOUT AND DETAILS FOR REVIEW BY ARCHITECT AND WSP-S.

OCT 2017

SLAB ON GRADE CONSTRUCTION JOINTS — TC-SOG-03

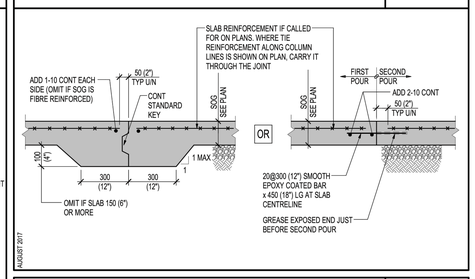

AUGUST 2017

SLAB ON GRADE AT MASONRY PARTITIONS 190 (7 1/2") AND THICKER — TC-SOG-11

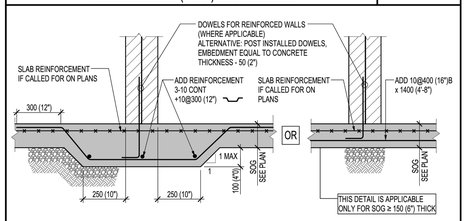

OCT 2017

SLAB ON GRADE STEP UP TO 300 (12") — TC-SOG-21

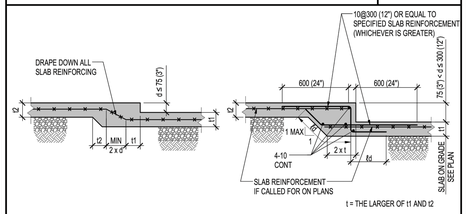

NOTE:
SEE TC-SOG-41 FOR DIAGONAL BARS ADDED AT CORNERS

OCT 2017

ADDED SLAB ON GRADE REINFORCEMENT AT RECESSES AND CORNERS — TC-SOG-41

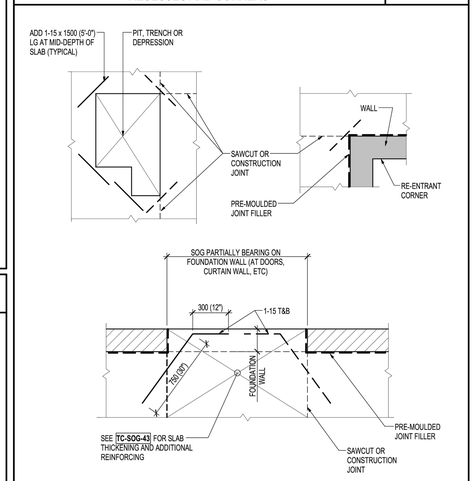

NOTES:

1. ADDITIONAL REBARS SHOWN THUS — — — ARE NOT REQUIRED, IF SAWCUT OR CONSTRUCTION JOINTS ARE PROVIDED AS INDICATED.
2. ADDITIONAL REBARS ARE NOT REQUIRED FOR FIBRE REINFORCED SLABS.

MAY 2017

SUMP PIT MAX 1800 (6'-0") DEEP — TC-SOG-31

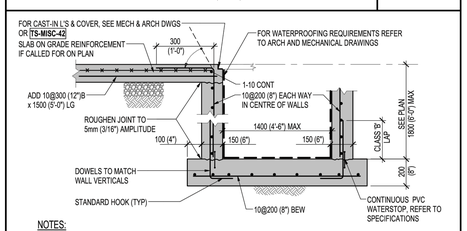

NOTES:

1. THIS DETAIL MAY BE USED FOR DEEPER PITS WHERE SPECIFICALLY NOTED ON PLANS.
2. SEE TC-SOG-41 FOR SOG DIAGONAL BARS ADDED AT PIT CORNERS.

OCT 2017

CONSTRUCTION JOINT IN WALL — TC-WALL-21

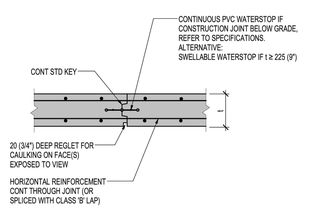

NOTE:
DO NOT PLACE CONSTRUCTION JOINTS IN ANY SHEAR WALLS.

JUNE 2017

KEYED EXPANSION JOINT IN WALL — TC-WALL-23

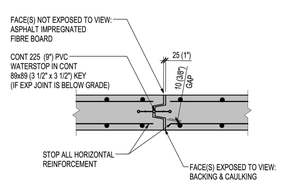

JUNE 2017

CLIENT:

PETSMART
19601 North 27th Avenue
Phoenix, Arizona 85027 - (623) 580-6100

CLIENT REF #: 1234

PROJECT:

14K 2025 CANADIAN INSTRUCTION SET

FEBRUARY 12, 2025

CONSULTANT:

ARCHITECT:

SEAL:

CITY SEAL:

DISCLAIMER: COPYRIGHT:
THIS DRAWING AND DESIGN IS COPYRIGHT PROTECTED WHICH SHALL NOT BE USED, REPRODUCED OR REVISED WITHOUT WRITTEN PERMISSION BY PETSMART. THE CONTRACTOR SHALL CHECK AND VERIFY ALL DIMENSIONS AND UTILITY LOCATIONS AND REPORT ALL ERRORS AND OMISSIONS PRIOR TO COMMENCING WORK.

THIS DRAWING IS NOT TO BE SCALED.

ISSUED FOR:

NUMBER	ISSUE	DATE

PROJECT NO: CA0045886.0146
DATE: 02.12.25
ORIGINAL SCALE: AS NOTED
IF THIS BAR IS NOT 1" LONG, ADJUST YOUR PLOTTING SCALE. 1"
DESIGNED BY:
DRAWN BY:
CHECKED BY:
PAGE #: 27 OF: 53

DISCIPLINE: STRUCTURAL

TITLE:

TYPICAL DETAILS

SHEET NUMBER:

S1.1